Introduction to Nanosatellite Engineering: CubeSat design using PrincetonSATELLITE SYSTEMS
HKUST MECH4890 Fall 2021

Lab task: CubeSat design and orbit (10 marks in total)

Using the (MATLAB a script in PrincetonSATELLITE SYSTEMS (PSS) CubeSat toolbox) carry out the following tasks:

For the CubeSat of your choice,

Task 1: evaluate the power consumption and size the battery;

Task 2: evaluate the isothermal temperature; and

Task 3: evaluate the disturbance in Low Erath Orbit.

A list of CubeSat is provided here for your reference:

Organization:	Satellite:	Year:	Size:	Mission:
NASA	IceCube	2014	3U	874GHz wave radiometer, cloud ice observations
Tethers Unlimited	MAST	2007	3U	Multi-Application Survivable Tether
Aalborg University	AAUSAT3	2013	1U	ship tracking near Greenland, Automatic Identification System
VKI/Innovative Solutions In Space	QB50P1	2014	2U	QB50 project demonstrator, lower thermosphere
University of Colorado Boulder	MinXSS-1	2015	3U	solar spectrometer
NASA	ISARA	planned	3U	reflectarray antenna,100 Mbps downlink communication
NASA	CuSP	planned	6U	solar particle, Ionosphere, Magnetosphere

The Keplerian (orbital) elements:

- semimajor axis
- eccentricity
- inclination
- right ascension of ascending node
- argument of periapsis
- true anomaly

can be found from:

- *Live Real Time Satellite Tracking and Predictions*:
  https://www.n2yo.com
- *Wikipedia*:
  https://en.wikipedia.org
- Note that the Perigee and the Apogee are measured from Above Mean Sea Level (AMSL)

---

1. Open the MATLAB graphical user interface (run as Administrator)

2. Copy to a local directory and rename the following MATLAB script:

   (a) "**BatterySizing_YourCubeSat.m**"

3. Edit MATLAB script "**BatterySizing_YourCubeSat.m**":

   (a) set orbit parameters:
```
altitude     = ____;            % [km] Above Mean Sea Level
radiusEarth = 6378.165;         % [km] Radius of Earth
inc          = ____*pi/180;     % [degree] Inclination
```
   For the LituanicaSAT2 example:
```
altitude     = 505;             % [km] Above Mean Sea Level
radiusEarth = 6378.165;         % [km] Radius of Earth
inc          = 97.44*pi/180;    % [degree] Inclination
```

   (b) set orbit date and time:
```
OrbitDateTime = [year month day hour minute seconds];
```
   For the LituanicaSAT2 example:
```
OrbitDateTime = [2017 6 23 4 22 19];
```

   (c) set battery design parameter
```
dOD = ____;    % [degree] Depth of discharge
```
   depth at desired average operating condition, time averaged value

   For the LituanicaSAT2 example:
```
dOD = 0.6;
```

   (d) set solar cell efficiency
```
d.effPowerConversion = ____; % the performance of actuators
d.solarCellEff       = ____; % the performance of solar cells
```
   For the LituanicaSAT2 example:
```
d.effPowerConversion =  0.8;
d.solarCellEff       = 0.29;
```
   where the figures are of the solar cell make "EMCORE" model "ZTJM".

   (e) set solar panel area
```
d.solarCellArea = [_,_,…,_]; % one element for each solar panel
```
   For the LituanicaSAT2 example:
```
d.solarCellArea = 0.00592*[3,3,3,3,3,3,3,3];
```
   where the solar panel properties are of the solar cell make "EMCORE" model "ZTJM":
   1U (1 unit) solar cell area: 59.2 cm^2;

   There are 8 panels when solar panels are deployed:
   "East", "West", "North", "South" size 3U (3 units) on the main body and
   "East", "West", "North", "South" size 3U (3 units) solar panels unfolded 150º.

3. Edit MATLAB script "**BatterySizing_YourCubeSat.m**":

   (f) set solar panel surface normal:
```
d.solarPanel.cellNormal = Unit([nx1,nx2,nx3,…,nx# ; …
                                ny1,ny2,ny3,…,ny# ; …
                                nz1,nz2,nz3,…,nz# ];
```
   where **nx#**, **ny#**, **nz#** define the orientation of solar panel surface normal;
   "**#**" represents the index for each face (**#**1, 2, 3, 4 for face 1, face 2, face 3, and face 4)

   For the LituanicaSAT2 example:
```
d.solarPanel.nPanel
= Unit([1,-1,0, 0,sqrt(3)/2,-sqrt(3)/2,0         , 0         ; …
        0, 0,1,-1,0         , 0         ,sqrt(3)/2,-sqrt(3)/2; …
        0, 0,0, 0,0.5       , 0.5       ,0.5       , 0.5       ]);
```
   There are 8 faces on the CubeSat when the solar panels deployed:
   "East", "West", "North", "South" on the main body and
   "East", "West", "North", "South" solar panels unfolded 150º.

4. Run the MATLAB script "**`BatterySizing_YourCubeSat.m`**" in the MATLAB environment:

   (f) change working directory in the MATLAB environment:
   ```
   >> cd 'C:\ … YourFilePath';
   ```

   (g) run the MATLAB script:
   ```
   >> BatterySizing_YourCubeSat
   ```

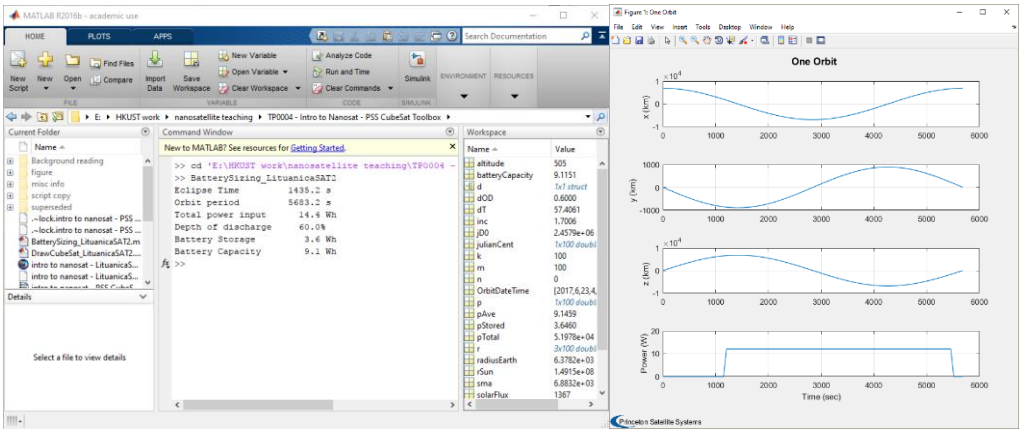

Classwork for task 1: With the aid of figures, plots and/or tables, for a CubeSat of your choice:

Q1: Find out about the power requirement and compare the impact of the following parameters on the solar panel size requirement (3 marks):

a) different orbit altitude ("**`altitude`**") (e.g. in 100 km increment);
b) different orbit inclination angle ("**`inc`**") (e.g. 0º, 30º, 60º, 90º).

Task 2: For the CubeSat of your choice, calculate the isothermal temperature using the Princeton**SATELLITE SYSTEMS** (PSS) CubeSat toolbox for MATLAB by carrying out the following steps:

1. Open the MATLAB graphical user interface (run as Administrator)

2. Copy to a local directory and rename the following MATLAB script:

   (a) "**`Isothermal_LituanicaSAT2.m`**"

3. Edit MATLAB script "**`Isothermal_YourCubeSat.m`**":

   (a) set orbit parameters:
   ```
   altitude     = ____;            % [km] Above Mean Sea Level
   radiusEarth  = 6378.165;        % [km] Radius of Earth
   inc          = ____*pi/180;     % [degree] Inclination
   ```

   For the LituanicaSAT2 example:
   ```
   altitude     = 505;             % [km] Above Mean Sea Level
   radiusEarth  = 6378.165;        % [km] Radius of Earth, averaged
   inc          = 97.44*pi/180;    % [degree] Inclination
   ```

   (b) set orbit date and time:
   ```
   OrbitDateTime = [year month day hour minute seconds];
   ```

   For the LituanicaSAT2 example:
   ```
   OrbitDateTime = [2017 6 23 4 22 19];
   ```

   (c) set CubeSat surface normal:
   ```
   d.uSurface = Unit([nx1,nx2,nx3,…,nx#; …
                      ny1,ny2,ny3,…,ny#; …
                      nz1,nz2,nz3,…,nz# ];
   ```

where **nx#**, **ny#**, **nz#** define the orientation of solar panel surface normal;
"**#**" represents the index for each face (**#**1, 2, 3, … for face 1, face 2, face 3 …)

For the LituanicaSAT2 example:

```
d.uSurface
= Unit([1, -1, 0,  0, 0,  0, sqrt(3)/2, -sqrt(3)/2, 0        ,  0        , -sqrt(3)/2,  sqrt(3)/2,  0        ,  0        ; …
        0,  0, 1, -1, 0,  0,         0,          0, sqrt(3)/2, -sqrt(3)/2,  0        ,  0        ,  sqrt(3)/2, -sqrt(3)/2; …
        0,  0, 1, -1, 0,  0,       0.5,        0.5, 0.5      ,  0.5      , -0.5      , -0.5      , -0.5      , -0.5       ]);
```

There are 14 external facets/surfaces on the CubeSat in total when the solar panels deployed:
- On the main body:
  "East", "West", "North", "South" size 3U (3 units); "top", "bottom" 1U (1 unit)

and
- Solar panels unfolded at 150º, both solar cell and Kapton film side:
  "East", "West", "North", "South" size 3U (3 units) x 2

3. Edit MATLAB script "**Isothermal_YourCubeSat.m**":

   (d) set CubeSat surface area:
   d.area = [Area1, Area2, Area3, … Area#];

   where **Area#** define the surface area of each panel;
   "**#**" represents the index for each face (**#**1, 2, 3, … for face 1, face 2, face 3 …)

   For the LituanicaSAT2 example:
   d.area = [0.3,0.3,0.3,0.3,0.1,0.1,0.3,0.3,0.3,0.3,0.3,0.3,0.3,0.3];

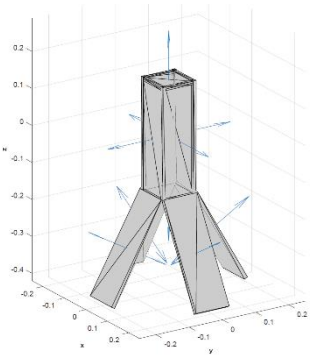

4. Run the MATLAB script "**Isothermal_YourCubeSat.m**" in the MATLAB environment:

   (a) change working directory in the MATLAB environment:
   >> cd 'C:\ … YourFilePath';

   (b) run the MATLAB script:
   >> Isothermal_YourCubeSat

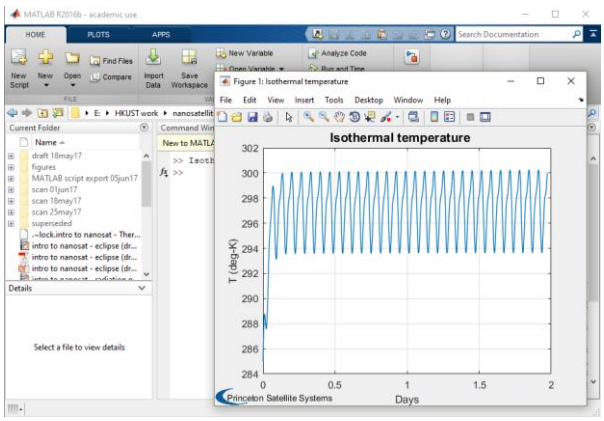

Classwork for task 2: With the aid of figures, plots and/or tables, for a CubeSat of your choice:

Q2: Compare the impact of the following parameters on the isothermal temperature (3 marks):

a) different orbit altitude ("**altitude**") (e.g. in 100 km increment);

b) different orbit inclination angle (“**inc**”) (e.g. 0º, 30º, 60º, 90º).

Task 3: For the CubeSat of your choice, calculate the resultant force and torque due to radiation pressure using the (MATLAB a script in Princeton**SATELLITE SYSTEMS** (PSS) CubeSat toolbox) and carry out the following steps:

1. Open the MATLAB graphical user interface (run as Administrator)

2. Copy to a local directory and rename the following MATLAB script:

   (a) “**RadiationDisturbance_YourCubeSat.m**”

3. Edit MATLAB script “**RadiationDisturbance_YourCubeSat.m**”:

   (a) set orbit parameters:

```
altitude     = ____;            % [km] Above Mean Sea Level
radiusEarth = 6378.165;         % [km] Radius of Earth
inc          = ____*pi/180;     % [degree] Inclination
```

   For the LituanicaSAT2 example:

```
altitude     = 505;             % [km] Above Mean Sea Level
radiusEarth = 6378.165;         % [km] Radius of Earth
inc          = 97.44*pi/180;    % [degree] Inclination
```

   (b) set orbit date and time:

```
OrbitDateTime = [year month day hour minute seconds];
```

   For the LituanicaSAT2 example:

```
OrbitDateTime = [2017 6 23 4 22 19];
```

   (c) set CubeSat body centre of mass

```
d.cM = ____; % an assumed value
```

   For the LituanicaSAT2 example:

```
d.cM = [0; 0; 0.01];
```

   this is an assumption.

   (d) set solar panel area

```
d.area = [_,_,…,_]; % one element for each external panel
```

   For the LituanicaSAT2 example:

```
d.solarCellArea = 0.1*0.1*[3,3,3,3,1,1,3,3,3,3,3,3,3,3];
```

   There are 14 external facets/surfaces on the CubeSat in total when the solar panels deployed:
   - On the main body:
     “East”, “West”, “North”, “South” size 3U (3 units) + “top”, “bottom” 1U (1 unit)

   and
   - Solar panels unfolded at 150º, both solar cell and Kapton film side:
     “East”, “West”, “North”, “South” size 3U (3 units) x 2

   (e) set external face surface normal:

```
d.nFace = [nx1,nx2,nx3,…,nx# ; …
           ny1 ny2 ny3 … ny# ; …
           nz1 nz2 nz3 … nz# ];
```

   where **nx#**, **ny#**, **nz#** define the orientation of solar panel surface normal;
   “**#**” represents the index for each face (**#** = 1, 2, 3, … for face 1, face 2, face 3 …)

   For the LituanicaSAT2 example:

```
d.uSurface
= Unit([1, -1, 0,  0, 0,  0, sqrt(3)/2 -sqrt(3)/2        0           0, -sqrt(3)/2 +sqrt(3)/2         0           0; …
        0,  0, 1, -1, 0,  0,         0           0 sqrt(3)/2 -sqrt(3)/2,         0           0 sqrt(3)/2 -sqrt(3)/2; …
        0,  0, 1, -1, 0,  0,       0.5         0.5       0.5         0.5,      -0.5        -0.5      -0.5       -0.5]);
```

3. Edit MATLAB script “**RadiationDisturbance_YourCubeSat.m**”:

(f) set external face vector from the centroid of face with respect to the centroid of the CubeSat body:

```
d.rFace = [rx1,rx2,rx3,…,rx#; …
           ry1,ry2,ry3,…,ry#; …
           rz1,rz2,rz3,…,rz# ];
```

where **rx#**, **ry#**, **rz#** define the position vector from the centroid of the CubeSat body to the centroid of face solar panel surface normal;
"**#**" represents the index for each face (**#**1, 2, 3, … for face 1, face 2, face 3 …)

For the LituanicaSAT2 example:

```
d.rFace
= [0.05, -0.05, 0, 0, 0, 0, 0.15*sqrt(3)/2, -0.15*sqrt(3)/2, 0, 0, 0.15*sqrt(3)/2, -0.15*sqrt(3)/2, 0, 0;…
   0, 0, 0.05, -0.05, 0, 0, 0, 0, 0.15*sqrt(3)/2, -0.15*sqrt(3)/2, 0, 0, 0.15*sqrt(3)/2, -0.15*sqrt(3)/2;…
   0, 0, 0, 0, 0.15, -0.15, -(0.075+0.15), -(0.075+0.15), -(0.075+0.15), -(0.075+0.15),…
                                                -(0.075+0.15),-(0.075+0.15),-(0.075+0.15),-(0.075+0.15)];
```

4. Run the MATLAB script "**RadiationDisturbance_YourCubeSat.m**" in the MATLAB environment:

(a) change working directory in the MATLAB environment:

```
>> cd 'C:\ … YourFilePath';
```

(b) run the MATLAB script:

```
>> RadiationDisturbance_YourCubeSat
```

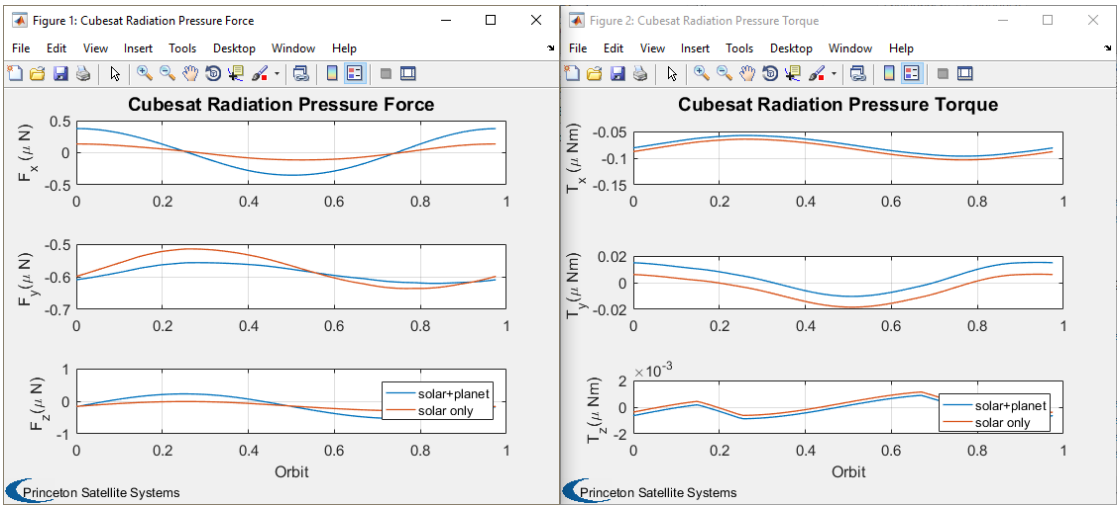

Classwork for task 3: With the aid of figures, plots and/or tables, for a CubeSat of your choice:

Q3: Compare the impact of the following parameters on the disturbances (3 marks):

a) different orbit altitude ("**altitude**") (e.g. in 100 km increment);

b) different orbit inclination angle ("**inc**") (e.g. 0º, 30º, 60º, 90º).

Classwork for all tasks:

Q4: Plot the ground tracks of the orbits in GMAT (1 mark).